MDC200-048051 - Brushless DC Controller

FEATURES

- *Maximum Current Limit Setting from 1-5 Amps up to 100W Power Output*
- *Internal or External Potentiometer Speed Control*
- *Run/Stop, Freewheel and Direction Inputs*
- *48VDC Motor Voltage Bus*
- *2-Quadrant Operation*
- *Hall Sensor Feedback*
- *Constant Velocity Mode*
- *Requires 85-135 VAC Power Input*
- *Selectable Ramp Up*
- *RoHS Compliant*

DIMENSIONS

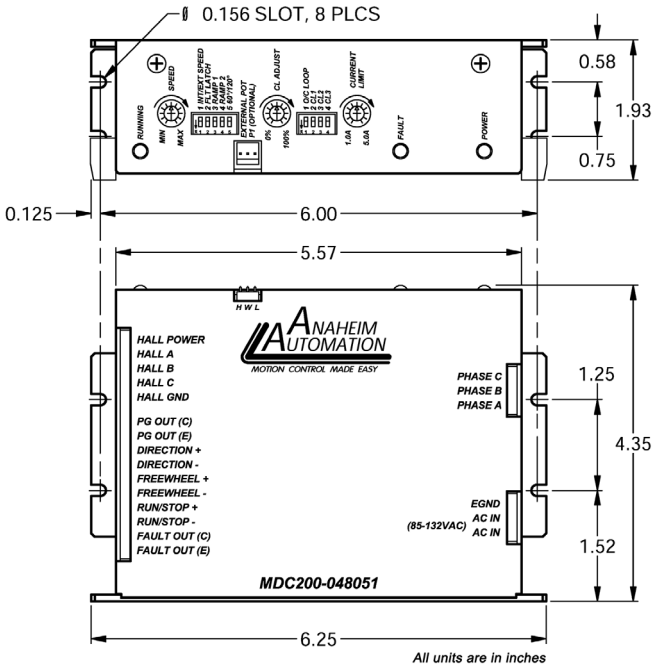

DESCRIPTION

The MDC200-048051 driver is a velocity control driver designed to drive DC Brushless Motors from a supply of 120VAC. With a motor bus voltage of 48V, maximum phase current of 5A (peak) and power output of 100W, this driver eliminates the need for an external power supply. Using hall sensor feedback, a constant velocity mode can be selected. The driver is protected against over current (cycle-by-cycle or latched), hall sensor error and under voltage. When an error occurs, a fault light notifies the user. If the fault latch is enabled an an error occurs, the fault output goes low to notify the user. Included on the driver is an internal potentiometer to control the maximum phase current allowed into the motor and an internal potentiometer to control the speed of the motor.

An optional external potentiometer (10K) can be used to control the speed as well. The direction of the motor can be preset by the direction control input.
Other inputs to the drive include a run/stop and a motor freewheel input. When using the run/stop input, there are three ramp up/down profiles from standstill to select from. The run/stop input overrides all other inputs into the driver.

Ideal Applications
Automated machinery or processes that involve food, cosmetic, or medical packaging, labeling, or tamper-evident requirements, cut-to-length applications, electronic assembly, robotics, factory automation, special filming and projection effects, medical diagnostics, inspection and security devices, conveyor and material handling systems, metal fabrication (CNC machinery), pump flow control, XY and rotary tables, equipment upgrades or wherever precise positioning or speed control is required.

L010410

910 East Orangefair Ln. Anaheim, CA 92801 **Tel. (714) 992-6990** Fax. (714) 992-0471 **www.anaheimautomation.com**

TORQUE CURVE

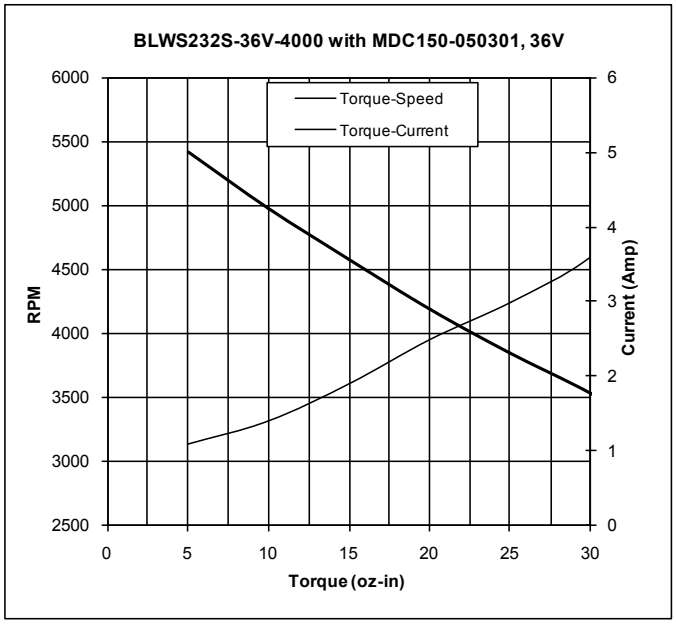

SPECIFICATIONS/ WIRING DIAGRAM
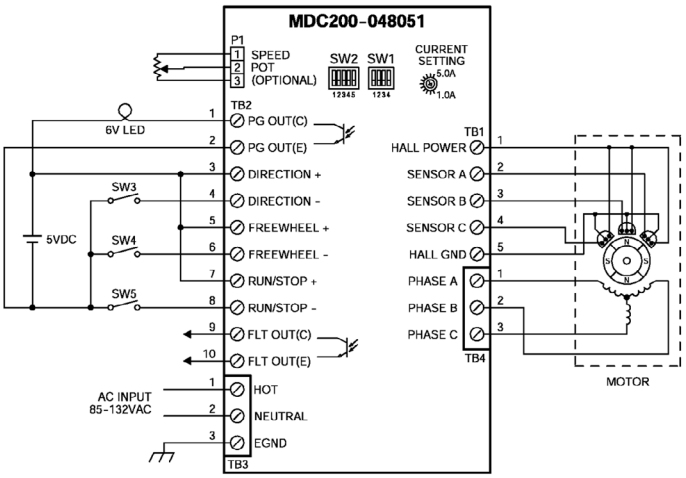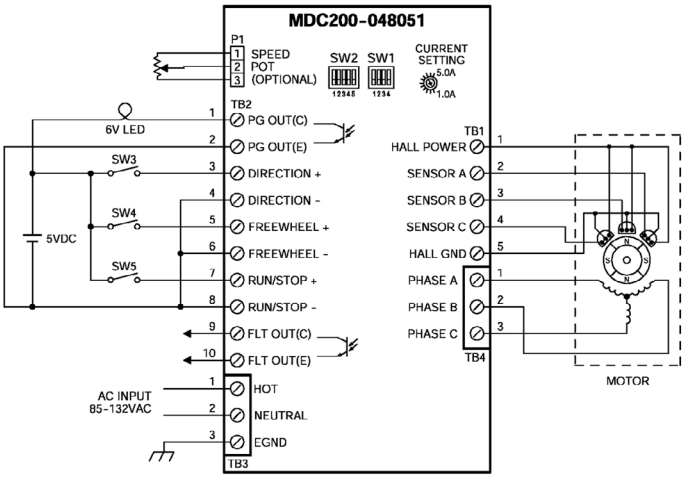
Power Requirements: (TB4, Pins 1 and 2)	85VAC(min) - 135VAC (max)
Output Current Range:	1.0 - 5.0 Amps (Peak) 0.5 - 2.5 Amps (Continuous)
Operating Temperature:	Heat Sink 0° - 70°C
Hall Sensor Power Output:	(6.25V @ 30mA maximum. Typical current draw from hall sensors is 20mA. All three Hall Sensor inputs are pulled up through 20K ohm resistors. The external speed control potentiometer must be 10K Ohms.
Open Loop/Closed Loop: (Constant Velocity Mode)	To operate Open Loop, the O/C LOOP switch (SW1 - pos1) must be in the 'on' position. To operate Closed Loop, the O/C LOOP switch must in the 'off' position and the CL ADJ potentiometer (R3) and CL ADJ dip switches (SW1 - pos2-4) must be set to optimize the driver for each application. The Closed Loop adjustments are needed for faster and slower motor operation, within the restrictions of the motor rated speed.