PIN	FUNCTION
1	MOTOR U YELLOW
2	MOTOR V RED
3	MOTOR W BLACK
4	MOTOR PE ⏚ YELLOW/GREEN

Housing:H66L6-04P
Terminal:T66L6-A

Connector Detail (Power Wire)

PIN	FUNCTION	COLOR
1	VDD	RED
2	GND	BLACK
3	MA_P+	BROWN
4	MA_N-	BLUE
5	SLO_P+	YELLOW
6	SLO_N-	GREEN

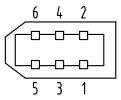

SC-06

Connector Detail (Feedback Wire)

PIN	FUNCTION
1	BRAKE+ RED
2	BRAKE- BLUE

Housing:H66L6-02P
Terminal:T66L5-A

Connector Detail (Brake Wire)

Brake Data			
Mo	0.32Nm	Pw	5.9W
Voltage Uc	24	Max speed	5000

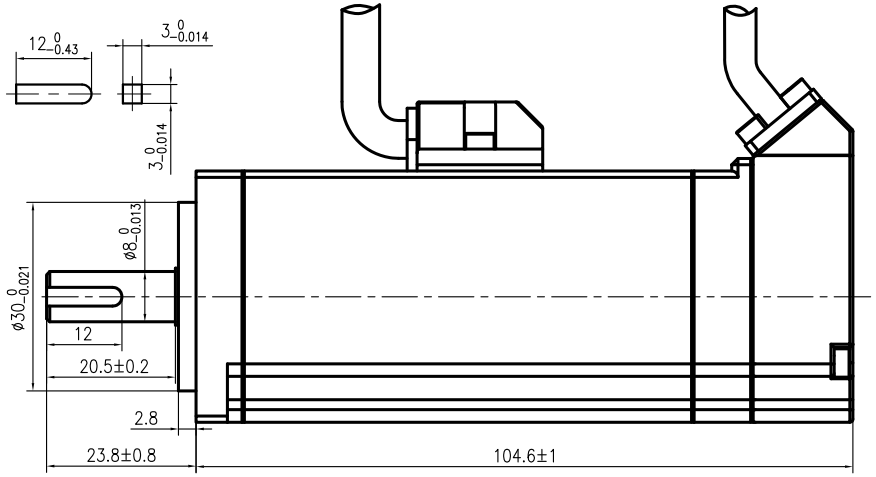

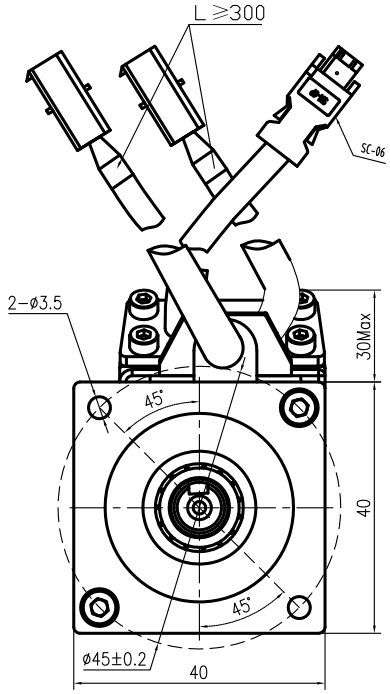

Tecnical Data	
No. of poles	10
DC Link Voltage Uoc (DC Link)	48
Rated Power Pw(W)	50
Rated Torque Tw(N.m)	0.16
Rated Speed nw(rpm)	3000
Rated Current Iw(A)	1.5
Maximum torque Tm(N.m)	0.48
Maximum Current Im (A)	4.5
Standstill torque Ts(N.m)	0.176
Standstill current Is(A)	1.65
Resistance line-line Rt(Ω)	4.1
Inductance line-line Lt(mH)	4.5
Electrical time constant τe (ms)	1.1
Mechanical time constant τm (ms)	1.17
Voltage constant Ke(V/krpm)	7
Torque constant Kt(Nm/A)	0.11
Rotor moment of inertia Jm (Kg.cm²)	0.021
Max. voltage rising du/dt(KV/μs)	8
Insulation class	F
Max. radial force Fr(N)	120
Max. axial force Fa(N)	60
Weight(Kg)	0.6
Feed back device	ME16MHM-04
Temperature sensor	n.a.
Cooling method	Totally enclosed non-ventilated
protection level	IP65,shaft sealing IP54
Evironmental conditions: Temperature	-20℃ 40℃
Evironmental conditions: Humidity	Below 90%RH (No dewing)
Evironmental conditions: Environment	Far away active gas,combustible gas,oil drop,ash.
Evironmental conditions: Installation altitude	UP TO 1000m:rated power, above 1000m:1.5% power decreasing per 100m,max.4000m
Rating conditions: Mounting	Aluminum flange 305x305x13mm
Rating conditions: Temperature	60K housing temperature ring at 40℃ ambient

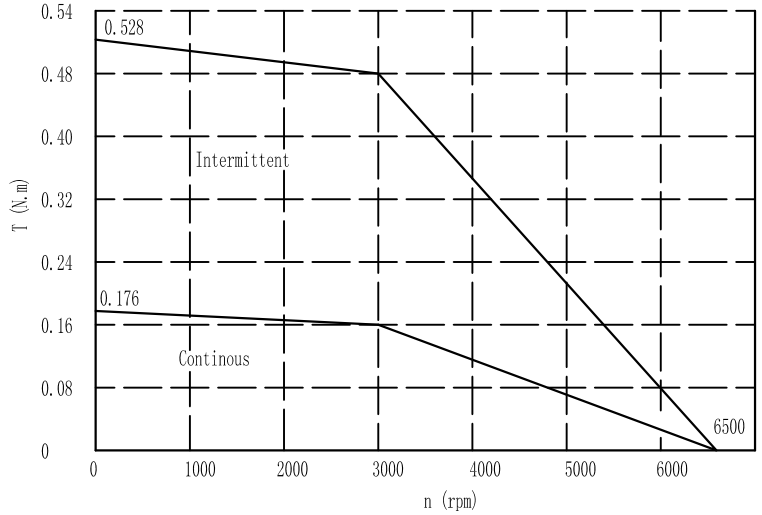

Kinco®
AC SERVO MOTOR
SMC40S-0005-30MBK-5DSU

W 50		V 48	
A 1.5		Nm 0.16	
RPM 3000	Ins F	IP 65	
Holding brake:24Vdc M=0.32Nm			

Kinco Servo Motor(Shenzhen) Ltd.
MADE IN CHINA
S/N:60BUK00YYDDDNNNN

REV	ECN NO.	DESCRIPTION	DRN	APP'D	DATE

UNLESS OTHERWISE SPECIFIED TOLERANCES:
DECIMALS: .x ±0.5 .xx ±0.25 .xxx ±0.1
ANGULAR: ±0°30'
UNIT: mm
DO NOT SCALE DRAWING

MATERIAL
CONTR.
FIRST ANGLE PROJECTION

DESIGN	ZZB	DATE 20181122
CHECK	YJL	20181122
APPD	SL	20181122
SCALE		
SHEET	OF	

P/N. 9.6960SS
TITLE 外形图
USED ON SMC40S-0005-30MBK-5DSU
DWG NO.
REV V1.1
Kinco