TGM25-150-26-3V-037A-5R-LW4 Series Spec Sheet

- Permanent Magnet Stepper Gear Motor
- High Torque in a Small Package at a Low Cost
- 17.63 oz-in of Max Torque
- Up to 500 g-cm of Holding Torque
- 5:1 Gear Ratio
- 25 mm Diameter

Specifications

Item	Specifications
Step Angle Accuracy	± 7% (full step, no load)
Resistance Accuracy	± 10%
Inductance Accuracy	± 20%
Temperature Rise	80° C Max
Ambient Temperature	-20° C to + 50°C
Insulation Resistance	100M Ω Min., 500VDC
Dielectric Stength	500VAC for one minute

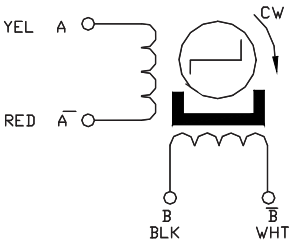

Model	Step Angle (deg)	Gear Ratio	# Of Wires	Voltage (V)	Current Per Phase (A)	Holding Torque (g-cm)	Detent Torque (g-cm)
TGM25-150-26-3V-037A-5R-LW4	15	5:1	4	3.5	0.365	500	150

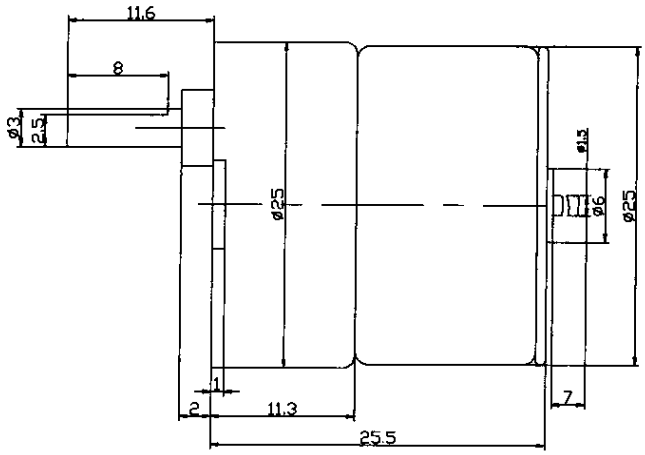

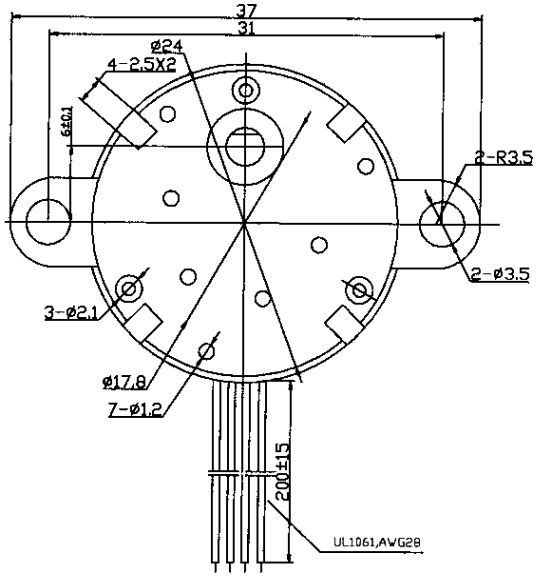

4985 E. Landon Drive Anaheim, CA 92807 Tel (714) 992-6990 Fax (714) 992-0471
www.anaheimautomation.com